Open Frame 31W 24V 1.3A



Input Specification	
Nominal Voltage	100 to 240Vac.
Nominal Frequency:	50Hz or 60Hz
Input Voltage Range:	90 to 264Vac
Input Frequency Range:	47~63Hz.
Maximum Input Current	0.9A, 100～240V, 50～60Hz
No Load and Light Load Power Consumption	Maximum no-load power consumption is less than 0.1W at 115Vac/60Hz and 230Vac/50Hz.
Efficiency	≥85% at full load

Output Specification			
	Min	Rated	Max
Output Voltage Regulation (Vo)(V)	23.0	24.0	25.0
Output Current Range (Io)(Amp)	0		1.3

Leakage current: ≤250uA at 264Vac, standard testing set-up
Burn-In: 50±3 ℃, Nominal input voltage, rated load
Dimension: 50*105*27mm Tolerance:±0.5mm
Enclosure Material: Plastic; Color: Black
AC inlet type: for Molex 5PIN(5N2) wafer 3.96mm
DC output: for Molex 4PIN wafer 3.96mm

Certification:
IEC 62368-1 Dielectric Withstand Voltage (HI-POT)
EMI: FCC Part 15, Subpart B, class B ; Subpart C; Subpart E
ICES-003:2016 Issue 6, Class B;
EN55032 Class B,
EN61000-3-2, EN61000-3-3
EMS: Immunity: K.21; FCC Part 68; EN55035
ESD:EN61000-4-2
Radiated Electromagnetic Field: EN61000-4-3
EFT/Burst: EN61000-4-4
Surge: EN61000-4-5
Conducted Disturbances: EN61000-4-6
UL 62386-1
Compliance: RoHs

Adaptors & Open Frame List

1 AB120AAE00 12W 12V 1A Adaptor

2 AE180AAE00 18W 12V 1.5A Adaptor

3 AN300IAE00 30W Multi-Volt Adaptor

(5V/3A, 9V/3A, 12V/2.5A, 15V/2A, 20V/1.5A)

4 AB360AAE00 36W 12V 3A Adapter

5 AN450IBE00 45W Multi-Volt Adaptor

(5V/3A, 9V/3A, 12V/3A, 15V/3A, 20V/2.25A)

6 AB480AAE01 48W 12V 4A Adapter

7 AE600AGE00 60W 12V 5A Adaptor

8 AN650IBE00 65W Multi-Volt Adaptor

(5V/3A, 9V/3A, 12V/3A, 15V/3A, 20V/3.25A)

9 AN121EBF00 120W 19.5V 6.15A Adaptor

10 AN151EGF00 150W 19V 7.89A Adaptor

11 AN181EBF 180W 19.5V 9.23A Adaptor

12 AN241FGF00 240W 20V 12A Adaptor

13 PE2005GE00 20W 5V 4A Open Frame

14 PE3005GE00 30W 5V 6A Open Frame

15 PG31BDYE00 31W 24V 1.3A Open Frame

16 PE400AGE00 40W 12V 3.33A Open Frame

Northeast Propulsion Trading Company

Adaptors





Life, Work, Entertainment Together

Adaptor 65W Multi-Volt

USB-C PD, 5V/3A, 9V/3A, 12V/3A, 15V/3A, 20V/3.25A

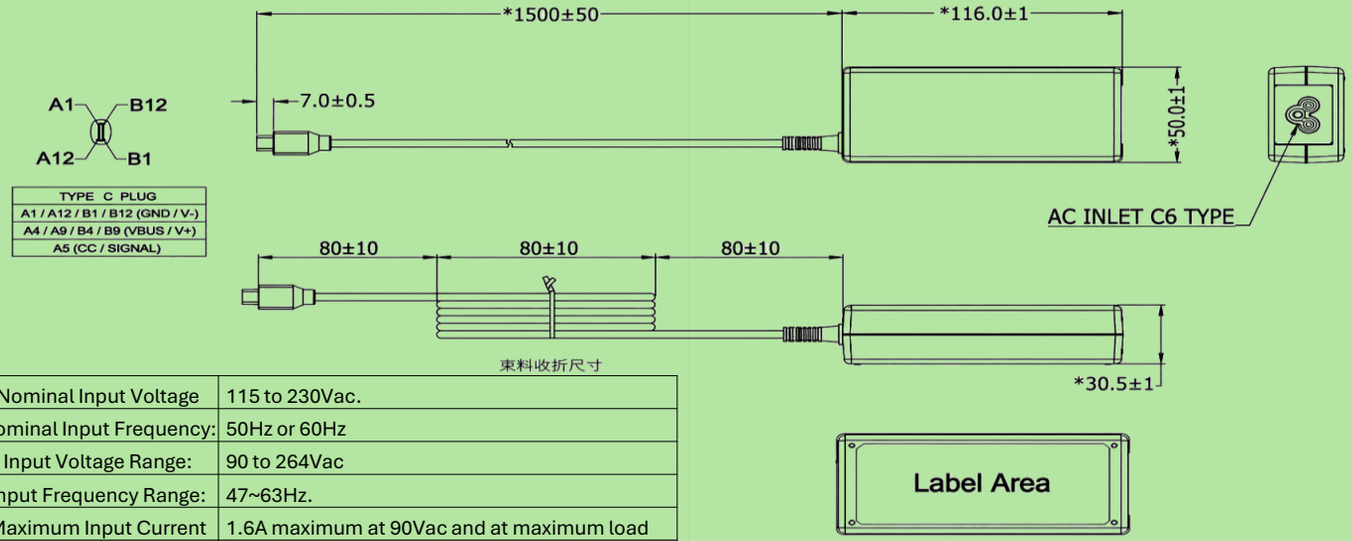

Nominal Input Voltage	115 to 230Vac.
Nominal Input Frequency:	50Hz or 60Hz
Input Voltage Range:	90 to 264Vac
Input Frequency Range:	47~63Hz.
Maximum Input Current	1.6A maximum at 90Vac and at maximum load
No Load and Light Load Power Consumption	5V Output voltage no-load power consumption is less than 0.075W at 115Vac/60Hz and 230Vac/50Hz.

Output Voltage (V)	Average efficiency test in active mode at 25%, 50%, 75% and 100% loaded (%)
5	≧81.83
9	≧87.30
12	≧88.30
15	≧88.85
20	≧89.00

Output Specification			
Output Voltage (V)	Regulation (V)	Output Current Range (A)	Ripple and Noise
5	4.85-5.25	3.0	< 180mVp-p
9	8.73-9.45	3.0	< 210mVp-p
12	11.64-12.6	3.0	< 250mVp-p
15	14.55-15.75	3.0	< 250mVp-p
20	19.4-21.0	3.25	< 300mVp-p

Ground leakage current: ≤3.5mA at 240Vac/50Hz
Burn-In: 35±3 ℃, Nominal input voltage, rated load
Dimension: 116*50*30.5mm Tolerance:±1mm
Enclosure Material: Plastic; Color: Black
AC inlet type:C6
DC output connector: USB TYPE-C

Certification:
IEC 62368-1 Dielectric Withstand Voltage (HI-POT)
ESD:EN61000-4-2
Radiated Electromagnetic Field: EN61000-4-3
EFT/Burst: EN61000-4-4
Surge: EN61000-4-5
Conducted Disturbances: EN61000-4-6
CE (SELF declaration)
LVD:EN62368-1
EMC: EN55032Class B; EN61000-3-2; EN61000-3-3

Adaptors 180W 19.5V 9.23A

Input Specification	
Nominal Voltage	100 to 240Vac.
Nominal Frequency:	50Hz or 60Hz
Input Voltage Range:	90 to 264Vac
Input Frequency Range:	47~63Hz.
Maximum Input Current	2.7A maximum at 90Vac and at rated load
No Load and Light Load Power Consumption	Maximumno-load power consumption is less than 0.15W at 115Vac/60Hz and 230Vac/50Hz.

Load	Average efficiency test in active mode at 115Vac and 230 Vac
25%	≧89.00
50%	≧89.00
75%	≧89.00
100%	≧89.00

Output Specification			
	Min	Rated	Max
Output Voltage Regulation (Vo)(V)	18.5	19.5	20.5
Output Current Range (Io)(Amp)	0		9.23

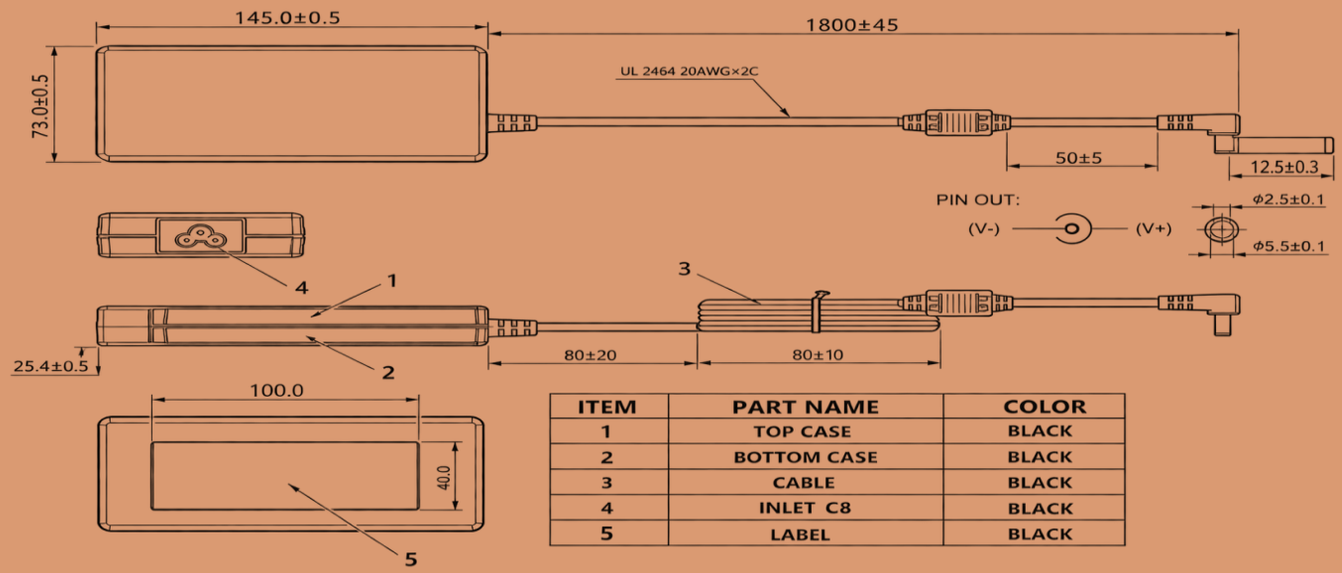

ITEM	PART NAME	COLOR
1	TOP CASE	BLACK
2	BOTTOM CASE	BLACK
3	CABLE	BLACK
4	INLET C8	BLACK
5	LABEL	BLACK

Dimension: 145.0*75.0*25.4mm Tolerance:±0.5mm
Enclosure Material: Plastic; Color: Black
AC type: IEC 320 C6
DC cable wire: UL1777 16 AWG, 80℃ 300V
Plug dimension: Outer diameter (OD): Φ5.5mm
Inner diameter (ID): Φ2.5mm
Metal Barrel Length: 12.5mm
Polarity of plug: Inner is Positive, +Vo
Outer is Negative, -Vo (GND)

Certification:
IEC 62368-1 & IEC 60950-1 (D-Dielectric Withstand Voltage (HI-POT)
EMI: FCC Part 15, Subpart B, class B; ICES-003:2016 Issue 6, Class B; CNS 13438 (Rev. 95); K32; VCCI; GB/T9254-208; GB17625.1-2012; EN55032 Class B, EN61000-3-2, EN61000-3-3; AN/NZS CISPR 32: 2015
EMS: Immunity: EN55035
Compliance: RoHs, energy star level 6